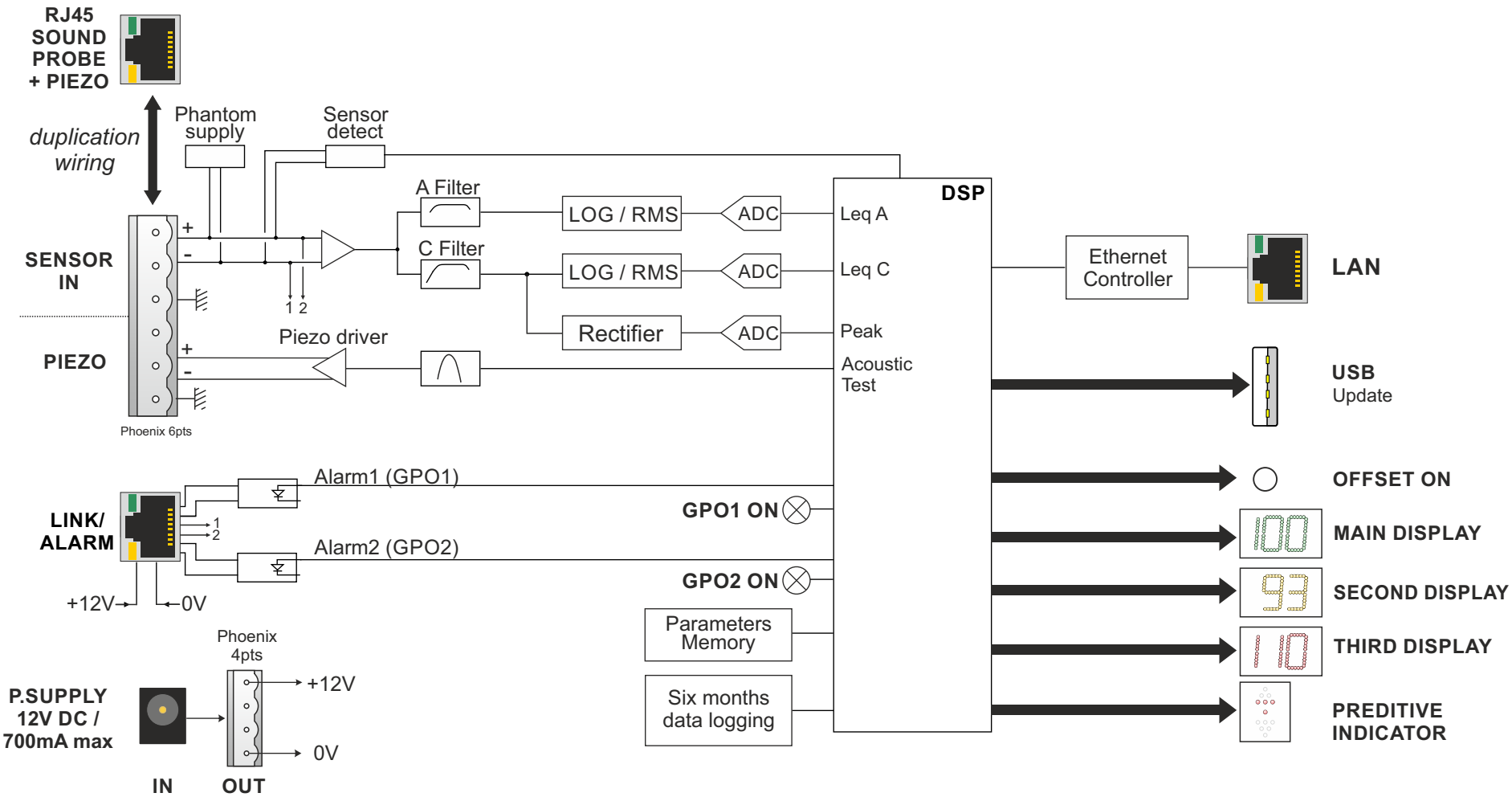
RJ45
SOUND
PROBE
+ PIEZO
duplication
wiring
Phantom
supply
Sensor
detect
A Filter
C Filter
LOG / RMS
LOG / RMS
Rectifier
ADC
ADC
ADC
DSP
Leq A
Leq C
Peak
Acoustic
Test
Ethernet
Controller
LAN
SENSOR
IN
PIEZO
Piezo driver
Phoenix 6pts
USB
Update
OFFSET ON
Alarm1 (GPO1)
Alarm2 (GPO2)
GPO1 ON
GPO2 ON
LINK/
ALARM
+12V
0V
MAIN DISPLAY
SECOND DISPLAY
THIRD DISPLAY
Parameters
Memory
Six months
data logging
Phoenix
4pts
P.SUPPLY
12V DC /
700mA max
+12V
0V
IN
OUT
PREDITIVE
INDICATOR