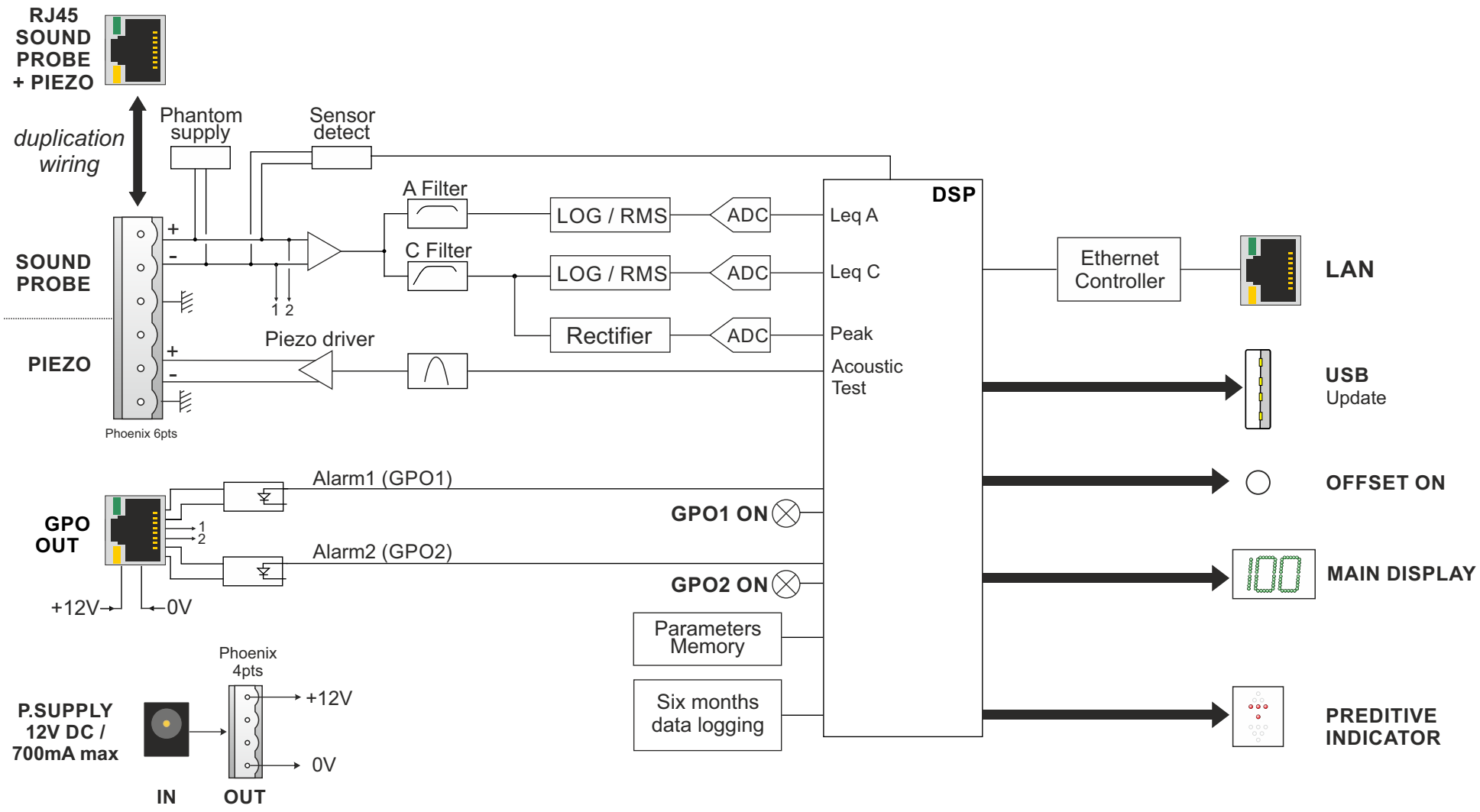
RJ45
SOUND
PROBE
+ PIEZO
duplication
wiring
Phantom
supply
Sensor
detect
SOUND
PROBE
PIEZO
+
-
1 2
Phoenix 6pts
A Filter
C Filter
LOG / RMS
LOG / RMS
Rectifier
ADC
ADC
ADC
Piezo driver
DSP
Leq A
Leq C
Peak
Acoustic
Test
Ethernet
Controller
LAN
USB
Update
OFFSET ON
MAIN DISPLAY
PREDITIVE
INDICATOR
GPO
OUT
1
2
+12V
0V
Alarm1 (GPO1)
Alarm2 (GPO2)
GPO1 ON
GPO2 ON
Parameters
Memory
Six months
data logging
P.SUPPLY
12V DC /
700mA max
IN
Phoenix
4pts
OUT
+12V
0V