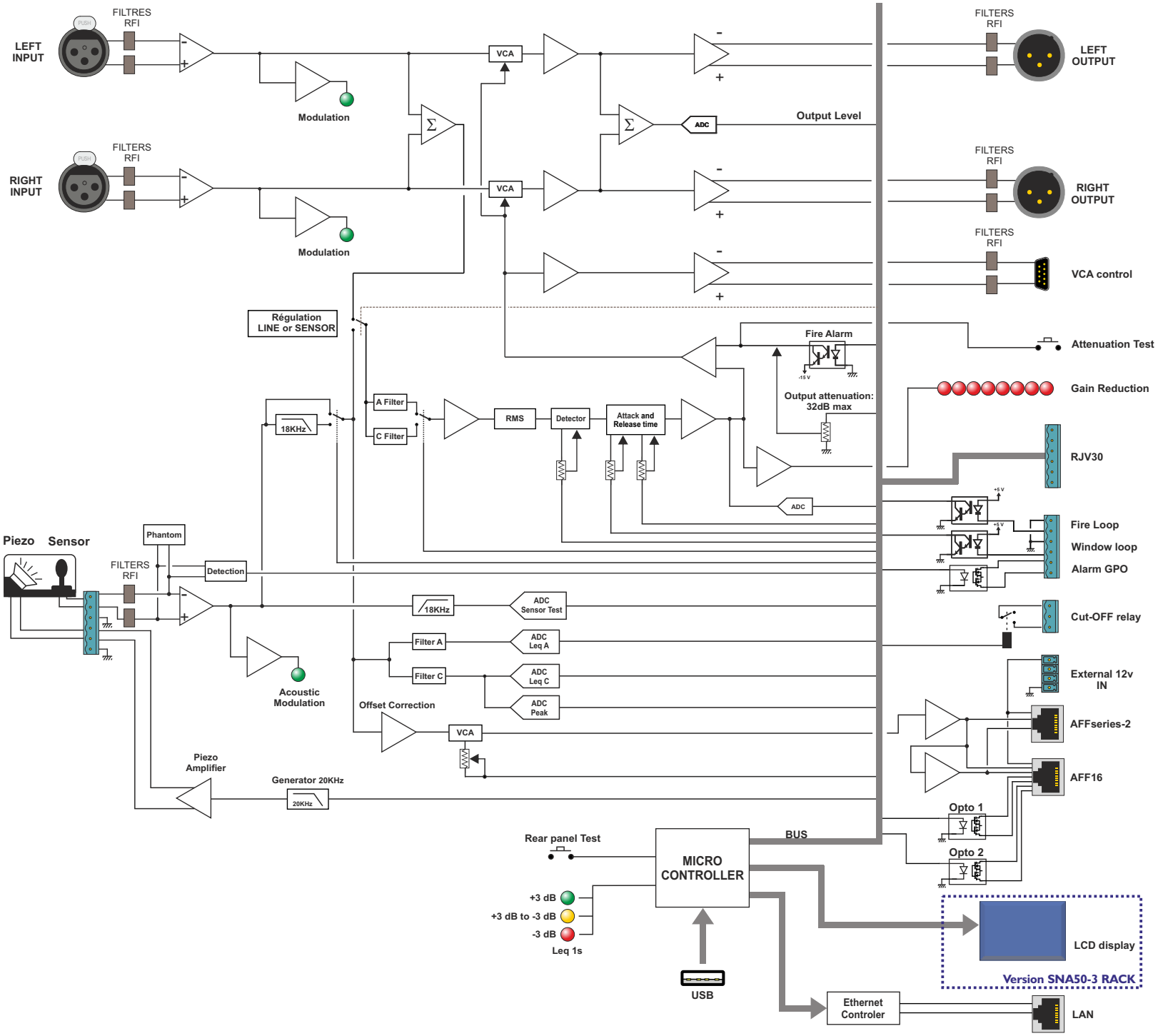
LEFT INPUT
FILTRES RFI
Modulation
RIGHT INPUT
FILTERS RFI
Modulation
VCA
VCA
ADC
Output Level
FILTERS RFI
LEFT OUTPUT
FILTERS RFI
RIGHT OUTPUT
FILTERS RFI
VCA control
Régulation LINE or SENSOR
Fire Alarm
Attenuation Test
Gain Reduction
Output attenuation: 32dB max
A Filter
C Filter
18KHz
RMS
Detector
Attack and Release time
ADC
RJV30
Fire Loop
Window loop
Alarm GPO
Piezo Sensor
Phantom
FILTERS RFI
Detection
18KHz
ADC Sensor Test
Filter A
ADC Leq A
Filter C
ADC Leq C
ADC Peak
Cut-OFF relay
External 12v IN
Acoustic Modulation
Offset Correction
VCA
AFFseries-2
AFF16
Piezo Amplifier
Generator 20KHz
20KHz
Opto 1
Opto 2
Rear panel Test
BUS
MICRO CONTROLLER
+3 dB
+3 dB to -3 dB
-3 dB
Leq 1s
USB
LCD display
Version SNA50-3 RACK
Ethernet Controler
LAN